Chapter 4
Effect of Microstructure and Process on the Fatigue Behavior of MP35N Multi-Strand Cable Used in Medical Device

Haitao Zhang and Bernard Li

Abstract In this study, we evaluated the microstructure and processing of MP35N Bundled Stranded Wire (BSW) cable subjected to various heat set temperatures and correlated these factors with fatigue performance. Fatigue testing was conducted using a bending fatigue method with a loading condition that better represent actual use case, and generalized S-N curves were generated. The results demonstrated a strong correlation between fatigue performance and cable break load. Notably, cables with <001> textured (NDR) wire exhibited a higher fatigue endurance limit compared to those with conventional <111> textured wire.

Keyword Medical device · MP35N cable · Fatigue

Introduction

The advancement of implantable medical devices, such as pacemakers, defibrillators, and neurostimulators, has significantly improved patient outcomes and quality of life in the management of chronic diseases. Central to the performance and longevity of these devices is the reliability of their lead conductors, which are responsible for transmitting electrical signals between the device and targeted tissues. Among various conductor designs, the 1×7 MP35N Bundled Stranded Wire (BSW) cable has been widely used as a lead conductor due to its unique combination of mechanical and material properties.

The 1×7 cable construction consists of seven individual wires—one central core wire encircled by six helically wound outer wires. This stranded configuration offers considerable advantages over single solid wire and more complex strand arrangements, providing enhanced flexibility and resistance to mechanical fatigue. Such attributes are crucial for implantable leads, which must endure millions of flexural cycles and dynamic bodily movements throughout their service life without experiencing electrical or structural failure. MP35N, a nickel-cobalt-based alloy, is widely recognized for its exceptional corrosion resistance, high tensile strength, and biocompatibility. These characteristics enable the cable to function reliably in the demanding physiological environments encountered within the human body. The alloy's resistance to degradation by body fluids and its ability to maintain mechanical integrity under repeated stress makes it an ideal material for long-term implantation.

Figure 2 illustrates the fabrication process of 1×7 MP35N cable. The annealing is a process to soften the wire for further drawing wire diameter. The cabling is a process to twist the 7 wires into cable shape. The heat set (thermal set) process is to relieve residual stress in the cable wire and enable cable shape setting. The ETFE coating is a process to add electrical insulation layer to the twisted cable. Previously the effect of annealing on mechanical and fatigue performance of the cable was studied and it was found that annealing temperature can reduce Ag core MP35N cable ductility drastically after thermal exposure [1]. In this paper, the effect of different heat set temperature on mechanical and fatigue performance of the cable was studied. The thermal set process on MP35N is to set the cable shape to prevent cable wire spring back. The thermal set process on MP35N cable usually is above 550°C which reduces the yield stress and prevents spring back of the wire. However, thermal set process at different temperatures results in a different break load on wire. This is due to the aging effect that occurred on the MP35N wire. The higher thermal set process temperature, the higher break load is, and the lower

Haitao Zhang · Bernard Li
Medtronic, 7000 Central Ave. NE, Minneapolis MN 55432
e-mail: haitao.zhang@medtronic.com; bernard.q.li@medtronic.com

© The Author(s), under exclusive license to River Publishers 2026

Jonathan B. Estrada et al. (eds.), *Mechanics of Biological Systems and Materials, Volume 3, 2026*, Conference Proceedings of the Society for Experimental Mechanics Series, https://doi.org/10.13052/rp-9788743816263

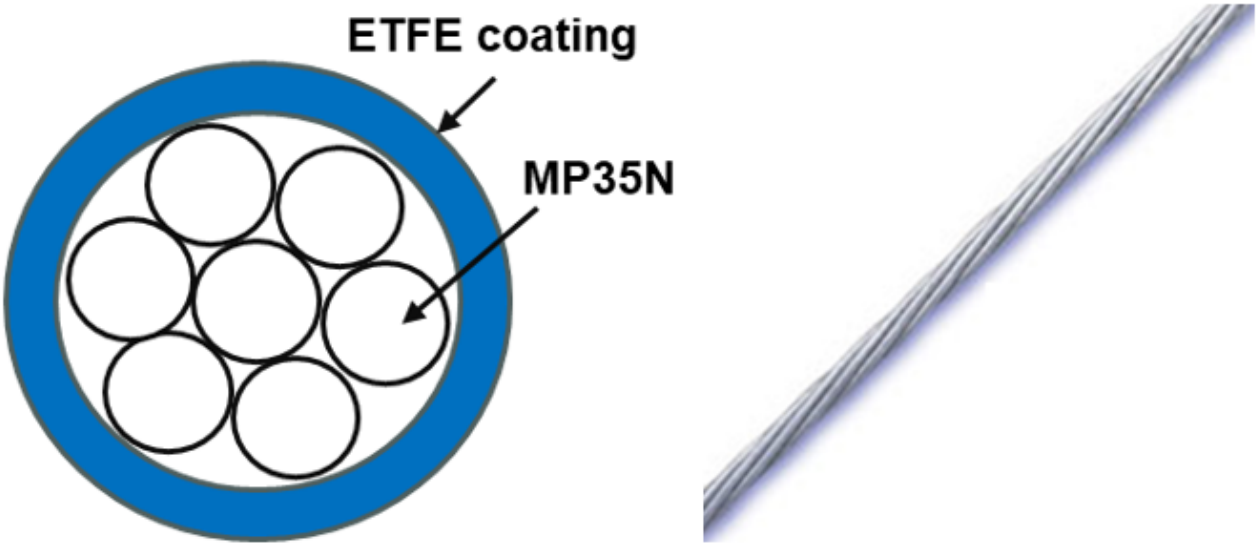

Fig. 1 Structure of 1×7 MP35N Cable.

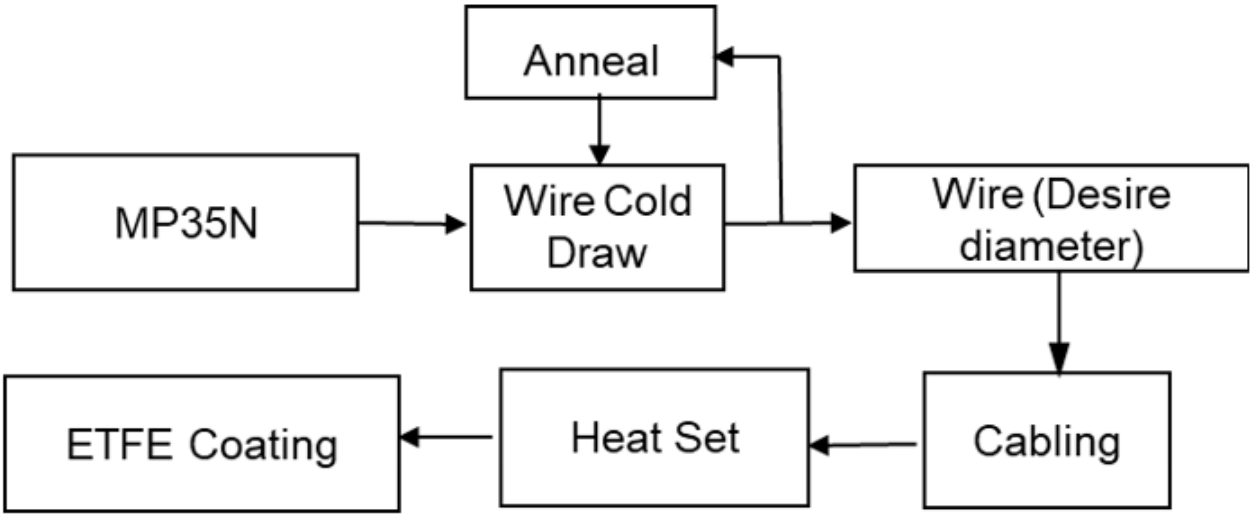

Fig. 2 Schematic Description of 1×7 MP35N Cable Process.

ductility is. The break load is indirectly a characterization of thermal set temperature. It is desirable to evaluate correlation between thermal set temperature and fatigue performance.

Methods and Materials

Each of the seven individual MP35N wires had a diameter of 0.034 mm. The overall diameter of the bundled stranded wire cable, for both Ag/MP35N and MP35N configurations, was 0.152 mm. The ETFE insulation coating had a thickness of 0.0254 mm.

Tensile testing of the cables was performed using an MTS Insight 200 kN testing machine. The gauge length was set to 254 mm, and tests were conducted at a crosshead speed of 6.35 mm/min.

Fatigue testing was conducted using a customized test system, as described previously [2]. The system consisted of a Bose ElectroForce 3200 Series high-speed linear fatigue testing machine, a computer for system control, customized

electrical monitoring circuitry with a dedicated monitoring computer, and a custom-designed fixture. The initial gap between the upper and lower fixtures was set to 6.35 mm. A gauge block was placed adjacent to the specimen to serve as a reference for subsequent data reduction, and a digital image (I0) was acquired. The specimen was then bent from the initial radius (R1) to a predefined smaller radius (R2), after which a second image (I1) was captured. The fixture gap was then returned to 6.35 mm. The specimen was subsequently connected to the electrical monitoring system, and fatigue testing was initiated at a frequency of 30 Hz.

The cable strain at radii R1 and R2 was calculated using the method described by [3].

Results and Discussion

The strain amplitude as a function of fatigue cycles (S–N curves) for MP35N cables with different break loads, as well as for the NDR cable, is shown in Figure 4. Data points marked with arrows indicate run-out conditions, defined as specimens that did not fracture before (10^7) cycles. Cable break load reflects the effect of heat-setting temperature. The results demonstrate a clear relationship between cable break load and fatigue performance, with fatigue performance improving as break load decreases.

The effect of break load on the fatigue endurance limit and low-cycle fatigue behavior of MP35N cables is shown in Figure 3. When the cable break load exceeds 2.8 lb, low-cycle fatigue performance decreases rapidly. In contrast, the NDR cable exhibits a significantly higher endurance limit and superior low-cycle fatigue performance. Cables fabricated with <001> textured (NDR) wire demonstrate higher fatigue endurance limits compared with cables using conventional <111> textured wire.

The thermal-setting process applied to MP35N cables is used to fix the cable geometry and prevent elastic springback of the wires. Thermal setting is typically conducted at temperatures above 550 °C, which reduces the yield stress and

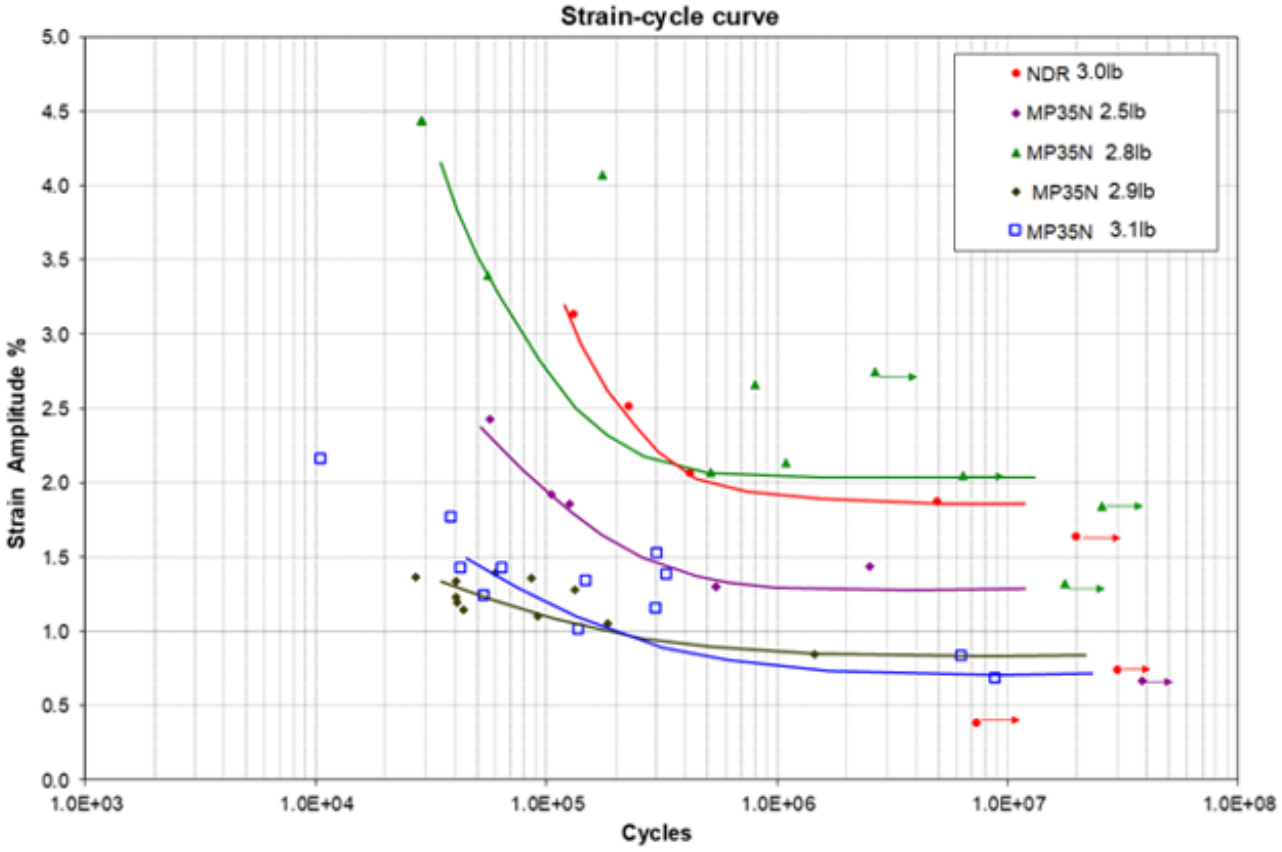

Fig. 3 S-N Curves of 1 × 7 Cable with Different Break Load.

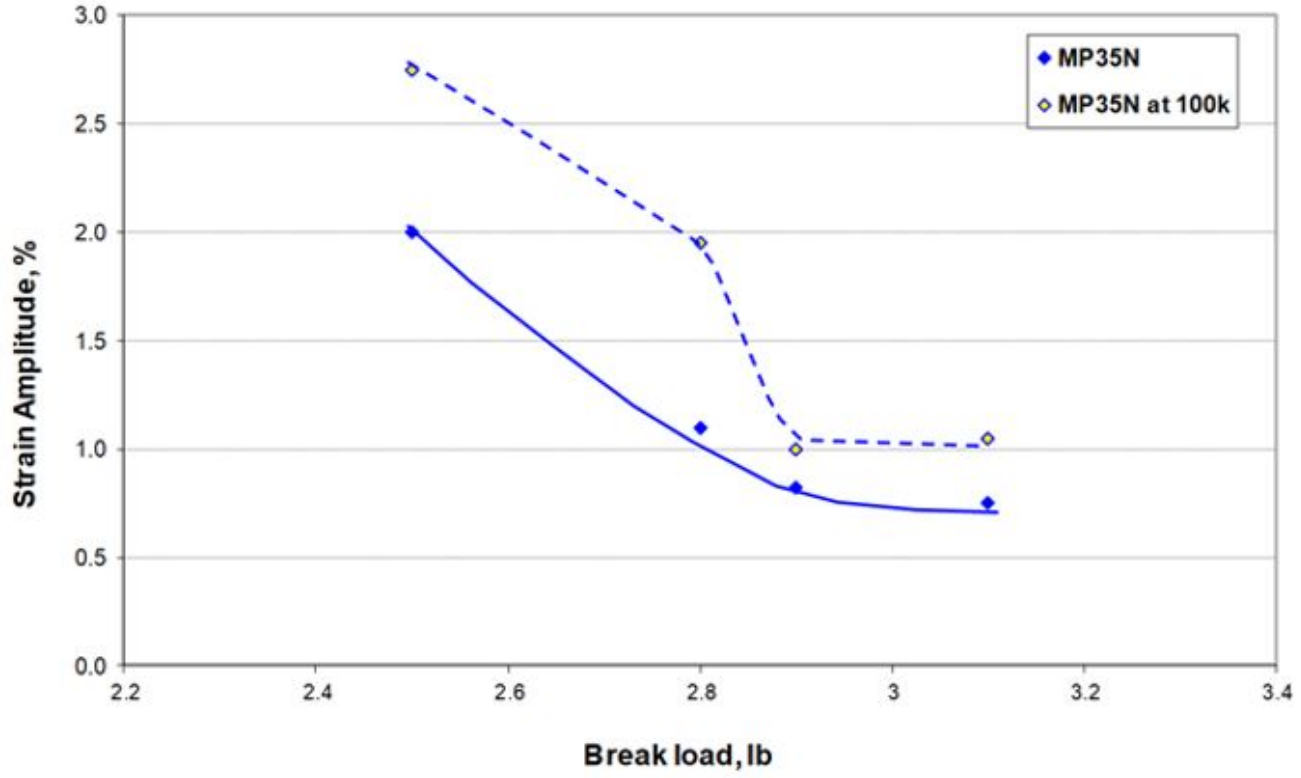

Fig. 4 Plot of fatigue performance and cable break load, the fatigue performance are endurance limit (10^7 cycles) (high cycle performance) and strain at 10^5 cycles (low cycle performance).

suppresses springback. However, thermal setting at different temperatures results in varying wire break loads due to aging effects in MP35N.

Higher thermal-setting temperatures lead to increased break load (tensile strength) but reduced ductility. The loss of ductility makes the wire more susceptible to crack initiation and less resistant to fatigue crack propagation, ultimately resulting in inferior fatigue performance. The pronounced aging response of MP35N is attributed to segregation strengthening. MP35N wires are heavily cold-worked, producing a high density of deformation twins, stacking faults, and other planar defects. These defects serve as preferential sites for solute atom segregation during thermal exposure. At elevated temperatures, solute atoms rapidly diffuse to and segregate at these defect sites, a process that can occur within seconds.

Thermal setting of MP35N cables and wires is typically performed in a strand-annealing furnace with a dwell time of less than 60 s, limited by furnace length. Consequently, adjustment of thermal-setting time is constrained. Under these conditions, MP35N wires experience a substantial increase in tensile strength accompanied by a significant reduction in ductility. By adjusting the thermal-setting temperature, the degree of aging can be controlled, resulting in cables with different break loads. MP35N cables with lower break loads retain higher ductility, which enhances resistance to fatigue crack initiation and propagation. This behavior is reflected in their superior fatigue performance.

Conclusion

The heat-setting process has a significant influence on the mechanical properties of 1×7 MP35N cables. The results indicate that cables with higher break loads (i.e., higher tensile strength) exhibit lower fatigue endurance limits. Cables with lower break loads demonstrate higher fatigue strain endurance limits at (10^7) cycles and superior fatigue performance in the higher strain regime. For applications requiring high fatigue strain endurance, cables with lower break loads should therefore be considered.

References

1. Wang, L., Li, B. Q., and Zhang, H., "Embrittlement phenomena of Ag core MP35N cable as lead conductor in medical device," Journal of the Mechanical Behavior of Biomedical Materials, 2012. doi:10.1016/j.jmbbm.2012.09.016..
2. Zhang, H., Li, B. (2016). Novel Bending Fatigue Testing of Small Medical Device Cables. In: Tekalur, S., Zavattieri, P., Korach, C. (eds) Mechanics of Biological Systems and Materials, Volume 6. Conference Proceedings of the Society for Experimental Mechanics Series. Springer, Cham. doi:10.1007/978-3-319-21455-9_16
3. Lewandowski, J. J., Varadarajan, R., Smith, B., Tuma, C., Shazly, M., and Vatamanu, L. O., "Tension and fatigue behavior of 316LVM 1×7 multi-strand cables used as implantable electrodes," Materials Science and Engineering A: Structural Materials, 2008. doi:10.1016/j.msea.2007.11.016.