Chapter 7
Liquid Pumping with Shallow Prismatic Grooves: An Experimental Study Using the Leidenfrost Effect

B. Bobeck, N. Boutain, N. Hieb, E. Kumba, J. Mitchell, H. Bae, and M. Michaelis

Abstract This study explores the utilization of the Leidenfrost Effect for liquid propulsion using shallow, prismatic semicircular grooves with ratchet-like geometry cut into them. The surfaces are heated above the Leidenfrost point, creating a vapor layer that enables water to be propelled in the grooves. The research focuses on two critical parameters of the ratchet-like geometry: tooth angle and depth of cut. A series of experiments were conducted on heated machined samples to assess how variations in these parameters influence liquid velocity. The results indicate that specific combinations of tooth angle and cut depth produced higher velocities, with smaller angles and shallower depths showing the most potential. These findings suggest the feasibility of using the Leidenfrost Effect for non-mechanical liquid pumping systems, offering broader implications for fluid transportation technologies without moving parts.

Keywords Leidenfrost Effect · Pump · Surface Engineering · Thermomechanics · Vapor Dynamics

Introduction

The Leidenfrost Effect occurs when a liquid comes into contact with a surface significantly hotter than its boiling point, causing a small amount of liquid to vaporize instantly and form an insulating vapor layer. Besides significantly slowing the vaporization process, this phenomenon also reduces friction between the liquid and surface and allows liquid to move freely across the surface. For water, this transition typically occurs at temperatures exceeding 190 °C (374 °F) for droplets larger than 3 mm in radius [1]. While the Leidenfrost Effect is well-documented, its potential for enabling liquid propulsion remains underexplored.

Previous research has shown that surface topographies, such as ratchet-like or sawtooth designs, can impart liquid motion by leveraging the vaporization-driven impulse. However, the integration of the Leidenfrost Effect with optimized surface designs for liquid propulsion—particularly to achieve uphill movement—remains an open area of investigation. Additionally, while previous studies have primarily focused on flat surfaces, the behavior of droplets on shallow, prismatic semicircular grooves has not been systematically investigated.

This study aims to advance the understanding of the relationship between surface geometry and liquid propulsion under Leidenfrost conditions. Specifically, the research examines how the angle and depth of shallow, prismatic semicircular grooves influence the velocity and trajectory of water droplets, enabling uphill movement. Using a custom-designed experimental setup with precise temperature control and adjustable inclination angles, the research evaluates the propulsion characteristics of water droplets across various surface geometries.

This paper details the experimental methodology, presents key findings, and discusses the broader implications of using the Leidenfrost Effect for liquid pumping without mechanical components. The results highlight the feasibility of leveraging thermomechanical principles for innovative fluid transportation technologies.

B. Bobeck · N. Boutain · N. Hieb · E. Kumba · J. Mitchell · H. Bae · and M. Michaelis
Eastern Washington University, Cheney, WA USA
e-mail: bbobeck@ewu.edu; nboutain@ewu.edu; nhieb@ewu.edu; ekumba@ewu.edu; jmitchell14@ewu.edu; hbae1@ewu.edu; michaelis@ewu.edu

© The Author(s), under exclusive license to River Publishers 2026

Kaitlynn Fitzgerald et al. (eds.), *Fracture, Fatigue, Failure and Thermomechanics & Infrared Imaging, Volume 4, 2026*,
Conference Proceedings of the Society for Experimental Mechanics Series, https://doi.org/10.13052/rp-9788743816270

Background

Prior research has demonstrated that asymmetric surface topographies, such as ratchet-like or sawtooth structures, at Leidenfrost temperatures can generate directional vapor flow, imparting a net force on a droplet. Linke, et al. [2] explored this effect, demonstrating that millimeter sized droplets could be accelerated up to around 5 cm/s. Additionally, Buguin, Talini, and Silberzan demonstrated that microstructured surfaces can control droplet motion without external mechanical input [3]. Work by Bernardin and Mudawar [4] investigated the effects of surface texture and material properties on the Leidenfrost point. Li et al. [5] extended this research by modeling droplet propulsion across inclined ratchet-like surfaces, showing that certain geometries can drive liquid uphill. However, their work primarily focused on flat or simple linear structures, leaving the influence of more complex surface geometries largely unexplored. Jonas, Orejon, and Sefiane [6] investigated free-fall velocity of submerged ratcheted cylinders, showing that the Leidenfrost effect affected drag.

Beyond geometry, material selection also influences Leidenfrost behavior. Baumeister, Henry, and Simon [7] investigated the role of thermal conductivity and surface composition, concluding that metals such as aluminum and brass sustain Leidenfrost conditions more effectively than materials like steel, glass, or gold-plated copper. These findings highlight the importance of selecting materials with high conductivity and controlled surface properties when optimizing Leidenfrost-driven fluid transport.

While the effects of ratchet-like geometries on Leidenfrost droplet movement have been studied, most research has been limited to flat surfaces or simple inclined structures. Additionally, the interaction between tooth angle, tooth depth, and incline capability can be investigated further. To address this gap, this study investigates shallow, prismatic semicircular grooves as a novel surface geometry for enhancing Leidenfrost-driven propulsion, with a focus on optimizing tooth angle and depth to maximize uphill movement.

Experimental Method

To investigate parameters influencing liquid propulsion under the Leidenfrost Effect, a custom experimental setup was designed and fabricated (Figures 1 and 2). The system allows for the concurrent testing of up to two specimens, which are

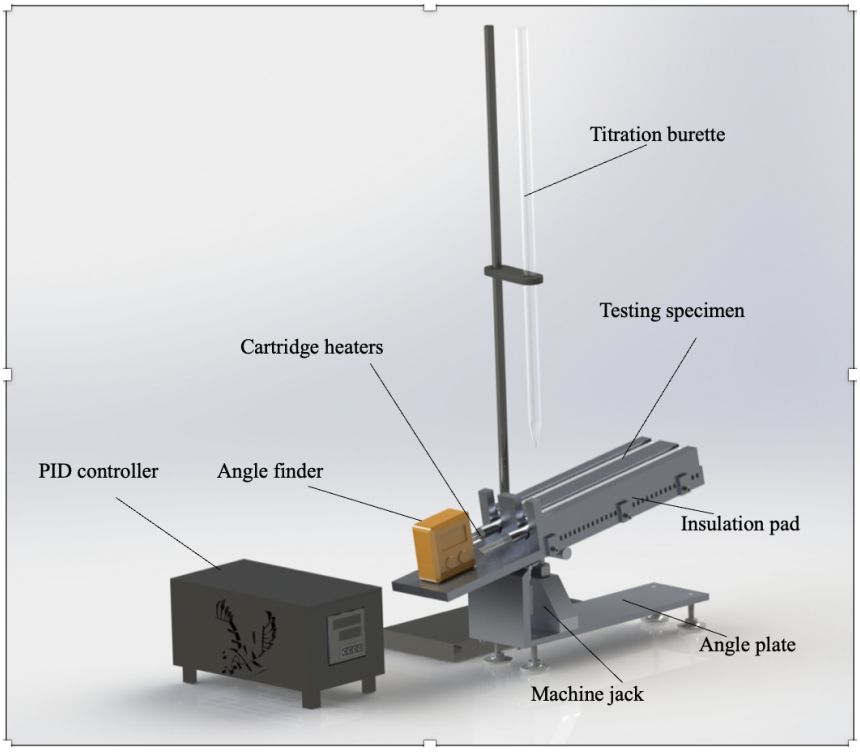

Fig. 1 Custom experimental setup.

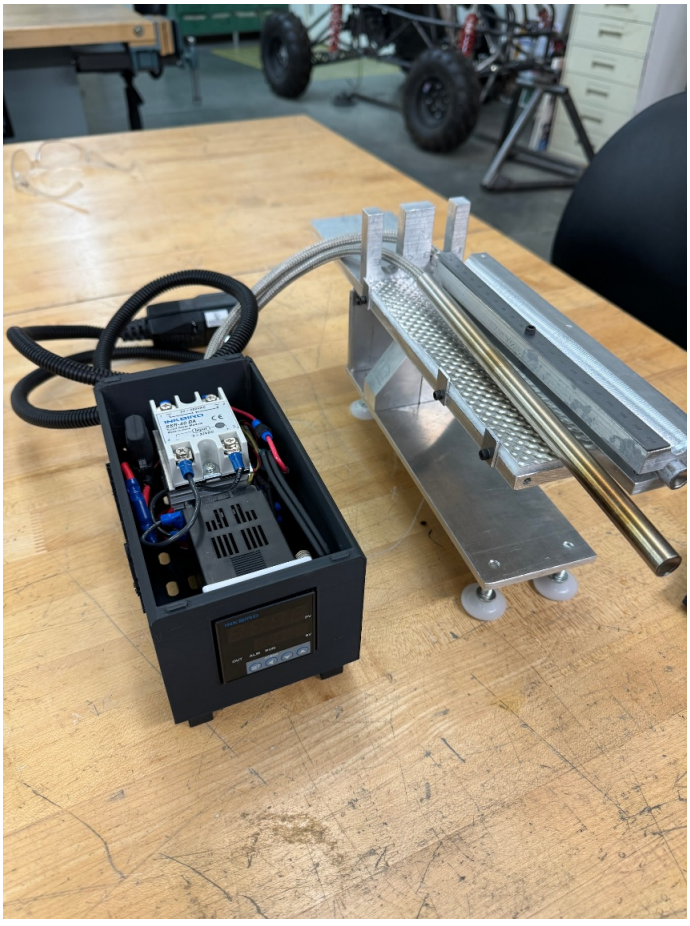

Fig. 2 Experimental setup showing a single test specimen, and PID temperature control system, and both mounted and unmounted cartridge heaters.

mounted on the adjustable angle plate to precisely set the inclination angle. To maintain Leidenfrost temperatures, cartridge heaters with integrated thermocouples were controlled using a PID temperature regulation system, ensuring uniform heating along the full length of the test specimens. Titration burettes were used to deliver distilled water at a controlled flow rate to the heated test surfaces.

Unlike standard flat test surfaces used in previous studies, this investigation employs shallow, prismatic semicircular grooves to constrain liquid movement along a single axis (Figure 3). These features were machined into 6061-T6 aluminum test specimens due to the material's high thermal diffusivity, machinability, and corrosion resistance. The test surfaces feature varying tooth depths (d) and angles (a) machined into them.

The general experimental procedure involved setting the inclination angle, heating the test specimens to the prescribed temperature, and then delivering distilled water, at a controlled flow rate, into the heated grooves. High-speed videography was utilized to capture the motion of water as it flowed up the grooves. The recorded footage was analyzed frame-by-frame, using a ½ mm precision scale, to extract positional data, allowing for the calculation of average droplet velocity over the measurement interval. Water launched off the end of the specimens was collected in a reservoir. Figure 4 shows an image of a test run in progress. Water being propelled is clearly shown in the channels.

For all testing, the heating system was set at a constant 193 °C and the titration burettes were set at a constant flow rate of 0.33 mL/s. At the start of each test, the titration burettes were filled to the 25 mL mark and never dropped below 15 mL to ensure that the flow rate stayed similar throughout the test. All of the water droplets were recorded over a length of 15 cm from the 60 mm mark to the 210 mm mark on the scale. This removed initial accelerations from the flow rate from our analysis.

The velocity for each water droplet was determined by measuring the displacement of each droplet over a known distance and dividing by the recorded time. This process was completed for fifteen water droplets for each test starting from 0 degrees of incline until failure by increasing at a rate of 0.5 degrees per test. The average of the water droplets was then recorded

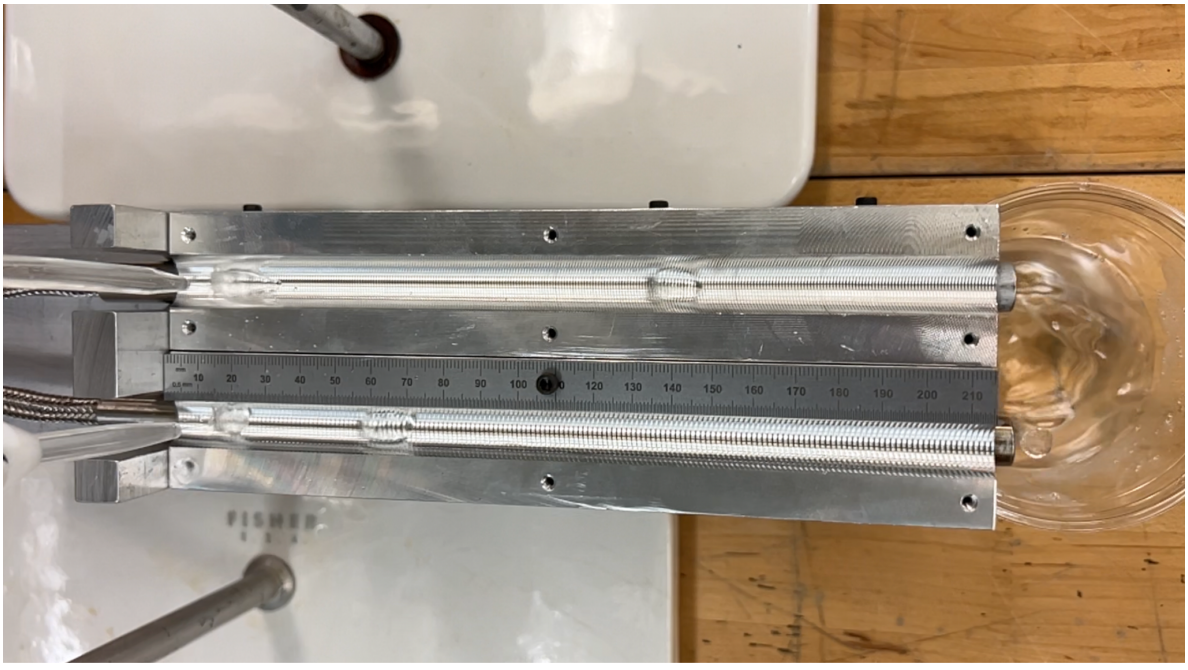

Fig. 3 a) Top view of two specimens with different tooth geometries and scale. b) Groove cross section illustrating 0.635 mm depths and 25° tooth angles.

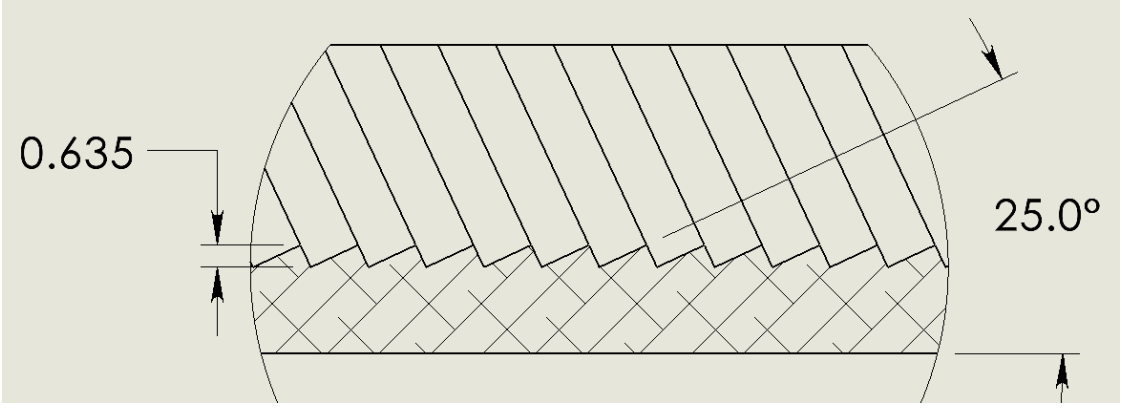

Fig. 4 Experimental setup in action showing two titration burettes dropping water onto two different test specimens at 0-degree angle of incline. Water is flowing from left to right. Top test bed: 30° tooth angle and 0.381 mm tooth depth, bottom test bed: 30-degree tooth angle and 0.635 mm tooth depth.

from the fifteen water droplets. These steps to control the distance measured and the precision of the timing helped ensure that the velocity was accurate to a substantial degree for water droplets moving across the test bed.

Results

This study investigated the influence of tooth angle (25°, 30°, and 35°) and tooth depth (0.38 mm and 0.64 mm) on the velocity of water droplets and their ability to travel uphill under Leidenfrost conditions. The key performance metrics evaluated were maximum inclination angle (beyond which droplets failed to reach the end of the groove) and droplet velocity at various inclination angles.

The maximum inclination angle at which water could still traverse the full length of the groove was determined for each specimen. As shown in Figure 5, the maximum inclination angle increased as the tooth angle decreased, reaching a

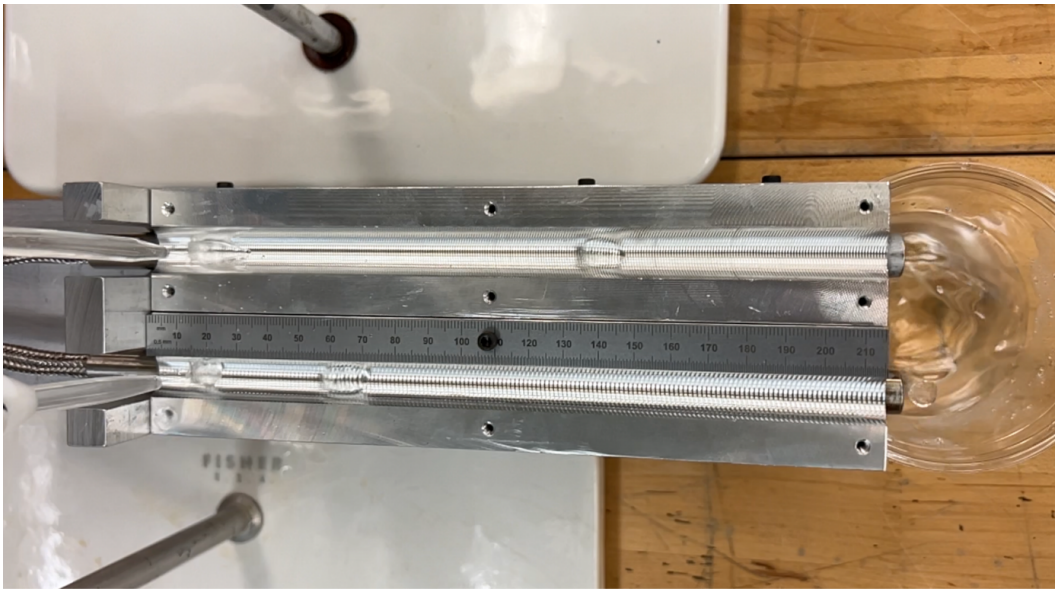

Fig. 5 The maximum angle of incline for six different test specimens organized by tooth angle (°) and depth (mm).

maximum of 5 degrees for the 25° tooth angle with a 0.38 mm tooth depth. The 35° tooth angle specimens resulted in the lowest maximum inclination angle, suggesting that steeper tooth angles are less effective for liquid propulsion.

Additionally, the effect of tooth depth was not uniform across all cases. For the 25° and 30° specimens, shallower teeth (0.38 mm depth) exhibited higher maximum inclination angles than their deeper counterparts. However, for the 35° specimens, the deeper teeth outperformed the shallower one. This suggests that tooth depth influences performance differently depending on the tooth angle.

Besides the maximum incline achieved, the velocity of the water at various incline angles was investigated as illustrated in Figure 6. As expected, the velocity was higher at low incline angles with a maximum average velocity of 33 cm/s for the 25°, 0.38 mm depth tooth profile. Not surprisingly, the maximum velocity correlated with the maximum 5 degree incline angle achieved too. The velocity then decreased linearly with increasing inclination angle for all specimens.

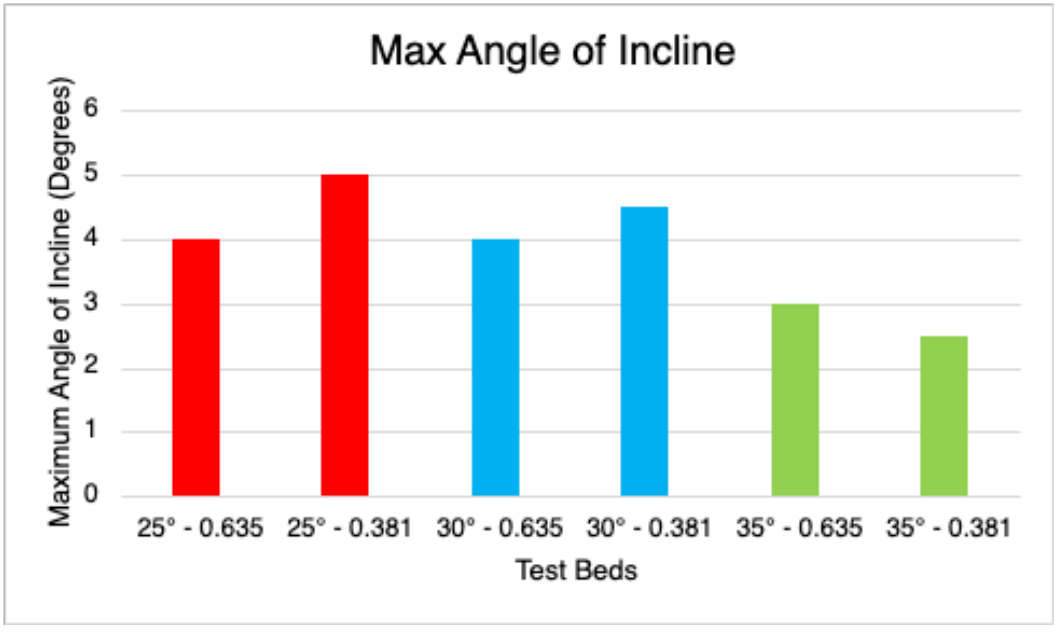

Fig. 6 Average velocity versus incline angle for all of the test specimens.

The shallow tooth, 25° specimen had the best performance overall and, when comparing it to the deep tooth specimen, tooth depth has a clear effect on performance with the shallower teeth achieving consistently higher velocities at all incline angles. However, for the 30° and 35° specimens, tooth depth doesn't have a noticeable effect. The 30° specimens had very similar velocities for both tooth depths and performed better than the deep 25° teeth, but worse than the shallow 25° teeth. The 35° specimen velocities, however, had higher velocities at low incline angles for the deeper teeth like the other samples, but lower velocities at higher incline angles with the transition occurring around an incline angle of 1.5 degrees. The 35° sample also had the lowest maximum incline angle performance which indicates that is not an optimal angle.

A linear regression analysis was performed to quantify the relationship between inclination angle and velocity for each test condition. The regression models yielded R^2 values greater than 0.96, indicating a strong linear correlation between velocity and inclination angle. The results reinforce the predictability of velocity reduction as incline increases, highlighting the feasibility of optimizing surface geometry to maximize propulsion efficiency.

Discussion

This study investigated the influence of surface geometry on liquid propulsion under Leidenfrost conditions, specifically examining the effects of tooth angle and tooth depth on velocity and maximum inclination angle. The results confirm that surface geometry plays a crucial role in controlling liquid motion and that certain configurations significantly improve performance.

The findings demonstrate a clear correlation between tooth angle and performance, with shallower angles (25°) outperforming steeper angles (35°) in both velocity and incline capability. The results indicate that shallower tooth angles generally provide better propulsion efficiency, with the 25° configuration achieving the highest recorded velocities and maximum incline, suggesting that shallower tooth angles provide a more effective mechanism for channeling the vaporization impulse and reducing backward slip. Conversely, the 35° tooth angle exhibited the poorest performance, particularly at higher inclinations. The steep angle appears to disrupt the Leidenfrost vapor layer's ability to sustain droplet movement, reducing propulsion efficiency.

The impact of tooth depth varied depending on the tooth angle. For 25° and 30° geometries, shallower teeth (0.38 mm) consistently outperformed deeper teeth (0.64 mm), achieving higher velocities and greater maximum inclination angles. However, in the 35° case, deeper teeth outperformed shallower ones at low inclinations but failed at steeper inclines. This suggests that at steeper angles, deeper teeth may introduce additional flow resistance, which limits their effectiveness. These findings indicate that tooth depth optimization is geometry-dependent and warrants additional investigation.

The results of this study provide valuable insight into the feasibility of using surface geometry to create passive liquid pumping systems that operate solely on thermal energy. While the inclination angles achieved were modest (up to 5 degrees), these findings highlight the potential for optimizing ratchet-like surface designs to enhance propulsion.

Further refinements in surface patterning, groove design, material selection, and thermal management could enable Leidenfrost-based pumps to transport fluids more efficiently across surfaces. This has implications for microfluidics, thermal management systems, and industrial cooling applications, where passive fluid movement could reduce energy consumption and complexity.

Several factors may have influenced the observed results and should be considered in future studies:

- Flow Rate Effects – This study maintained a constant flow rate (0.33 mL/s). Future research should explore variable flow rates to determine their impact on velocity and incline limits.
- Surface Material Influence – All tests were conducted using 6061-T6 aluminum due to its high thermal conductivity and machinability. Investigating alternative materials with different thermal properties and surface wettability could further optimize performance.
- Temperature Variation – The test temperature was fixed at 193°C. Exploring temperature-dependent effects could reveal additional optimization strategies.
- Geometric Modifications – Future studies should refine the geometry by testing additional angles and alternative tooth profiles (e.g., asymmetric ratchets, curved teeth).

These avenues of research will contribute to the development of more effective Leidenfrost-based propulsion systems with broader industrial and scientific applications.

Conclusion and Future Work

This study demonstrates that surface geometry significantly influences liquid propulsion under Leidenfrost conditions. The results show that shallower tooth angles (25°) and smaller tooth depths (0.38 mm) consistently produced higher droplet velocities and achieved greater incline capabilities. In contrast, steeper tooth angles (35°) limited the effectiveness of propulsion, particularly at higher inclinations. This suggests that investigating even smaller tooth angles and/or shallower tooth depths is warranted.

These findings highlight the potential of Leidenfrost-based passive liquid transport systems, which could be optimized for microfluidic applications, thermal management, and non-mechanical fluid transport. The study identifies tooth angle and depth as key parameters governing liquid motion, providing a foundation for future research into optimized surface geometries and material effects.

Further investigations should focus on expanding the tested geometric parameters, exploring variable flow rates, and analyzing the impact of alternative materials and surface treatments. These efforts will contribute to the development of efficient, thermally driven fluid transport mechanisms that operate without mechanical components.

Acknowledgments The authors would like to thank the staff members of the Mechanical Engineering & Technology Department at Eastern Washington University. This project would not be possible without the continual use of well-kept department facilities and tools.

References

1. D. Harvey, J.M. Harper, and J.C. Burton, “Minimum Leidenfrost Temperature on Smooth Surfaces,” Phys. Rev. Lett. 127, 104501, 2021.
2. H. Linke, B. J. Aleman, L. D. Melling, M. J. Taormina, M. J. Francis, C. C. Dow-Hygelund, V. Narayanan, R. P. Taylor, and A. Stout, “Self-Propelled Leidenfrost Droplets,” Phys. Rev. Lett. 96, 154502, 2006.
3. A. Buguin, L. Talini, and P. Silberzan, “Ratchet-like topological structures for the control of microdrops,” Applied Physics A, 75, 207–212, 2002.
4. J. D. Bernardin and I. Mudawar, “The Leidenfrost Point: Experimental Study and Assessment of Existing Models.” ASME. J. Heat Transfer, 121(4): 894–903, 1999.
5. Q. Li, Q. J. Kang, M. M. Francois, and A. J. Hu, “Lattice Boltzmann modeling of self-propelled Leidenfrost droplets on ratchet surfaces,” Soft Matter, 12(1), pp. 302–312, 2016.
6. A. Jonas, D. Orejon, and K. Sefiane, “Drag Reduction and Leidenfrost Effect on Submerged Ratcheted Cylinder,” Heat Transfer Engineering, 44:21-22, 2040-2061, 2023.
7. K. J. Baumeister, R. E. Henry, and F. F. Simon, “Role of the surface in the measurement of the Leidenfrost Temperature,” National Aeronautics and Space Administration, Lewis Research Center, Cleveland, Ohio, USA, 1970.