Chapter 14
Measurement of Local Contact Stiffness Using Ultrasound

R. Justin Osborne, Levi Mydlenski, and Drithi Shetty*

Abstract Friction in built-up structures has a nonlinear impact on the overall dynamics and is difficult to predict due to the different phenomena occurring at various length scales. A major challenge is observing and quantifying the interfacial behavior in-situ. One solution that has long been studied is the use of ultrasound to measure the interfacial contact stiffness. However, existing research requires complete immersion of the setup in water or permanently attaching the transducer to the test article using epoxy to ensure good, consistent coupling between the transducer and metal. Immersion would change the interface conditions whereas epoxy-based coupling would mean that an array of transducers is required to measure larger contact surfaces. This paper proposes a low-cost, scalable, roving-transducer method that uses a conformable delay-line with a magnetic holder to dry-couple the transducer to the metal surface. A series of quasi-static compression tests is performed to assess the accuracy and repeatability of the proposed method.

Keywords ultrasound, interfacial contact stiffness, friction, microslip, roving transducer

Introduction

Mechanical joints are used for the assembly of components in various engineering applications from large dynamic structures such as crawler cranes to smaller components such as gas turbine blades or piston connecting rods. Partial slip contact within these joints results in the frictional dissipation of energy and changes to the structural stiffness [1]. In some cases, friction in these joints may be beneficial, but is often detrimental [2]. Improved modeling of the contact during dynamic simulation is expected to reduce the cost of prototyping and dynamic testing as well as contribute to extending the life of the component. Accurately modeling the contact interface is challenging because there are complex mechanisms occurring at various scales, from material interactions at the nanoscale to the effects of surface roughness at the microscale. Plasticity, thermal effects, the formation and breakage of chemical bonds, along with additional mechanisms, may also be involved, increasing the complexity in accurately modelling the overall response of the contact.

A significant challenge in studying the effect of these mechanisms is measuring, or even observing the change in the contact interface in-situ. However, some approaches do exist for evaluating changes in the contact interface such as Digital Image Correlation (DIC), pressure films, and optical methods but with their limitations. For example, DIC can be used to measure the relative displacement of the interface but can only be used to observe the changes on the exterior of the interface and not across the joint [3]. As an alternative, static or dynamic pressure films can be used to provide information on contact pressure at the interface. However, addition of the pressure film alters the physical properties of the contact interface [4]. Optical methods based on internal reflection [5], can also be used, but they require transparency in at least one portion of the joint, limiting their use.

An alternative method to investigate changes in the interface is the use of ultrasonic reflectometry. The contact stiffness at metal interfaces can be determined from the coefficient of reflection of an ultrasonic beam [6, 7]. L. Pesaresi et al. [8] utilized this relationship to detect stick and slip states in contact interfaces subjected to high-frequency shear vibration using epoxy coupled transducers. The use of epoxy coupling requires multiple transducers to measure across an area which can be prohibitive in both cost of the transducer array and attachment space which limits how close measurements can be

R. Justin Osborne · Levi Mydlenski · Drithi Shetty
Department of Mechanical and Aerospace Engineering, University of South Florida, Tampa, 33620, FL, USA
e-mail: rjosborn@usf.edu; lamydlenski@usf.edu; dshetty@usf.edu

*Corresponding author email: dshetty@usf.edu

© The Author(s), under exclusive license to River Publishers 2026

Kristin B. Zimmerman, PhD (eds.), *Nonlinear Structures & Systems, Vol. 1*, Conference Proceedings
of the Society for Experimental Mechanics Series, https://doi.org/10.13052/rp-9788743814122

taken. A more scalable approach is use of a roving transducer. However, one challenge with doing so is ensuring consistent coupling between the transducer and the metal surface at every measurement location. Jerome et al. [9] developed a method that used a movable water column to measure contact stiffness between aluminum plates. Shetty et al. [10] used a spring-loaded conformable delay-line to measure contact stiffness on metal specimens. Water immersion provides good consistent coupling but requires water on the test specimen which can be challenging in both dynamic measurements and across large areas. The spring method, although movable across the interface, provides too much variation in the coupling force resulting in inconsistent measurements. This work investigates the use of a dry coupled transducer with a conformable delay-line using magnetic attachment to address the drawbacks of existing techniques and enable the measurement of contact stiffness across large interfaces. The next section briefly describes the theory behind measuring contact stiffness with ultrasound and the proposed test procedure. It is followed by the preliminary results of this research.

Methodology

Proposed Approach

Ultrasound has been used as a method for measuring contact stiffness for decades. In 1996, Drinkwater demonstrated that low-frequency ultrasonic longitudinal waves can accurately measure contact stiffness between an interface consisting of two aluminum plates [7]. The interface can be modeled using a spring system, as shown in Fig. 1, where P_{nom} is the nominal contact pressure given by the load divided by the nominal contact area and u represents the average separation between the two surfaces. Contact stiffness, $K_{contact}$, is therefore defined as the pressure required to produce unit displacement, as shown in Eq. 1 [7].

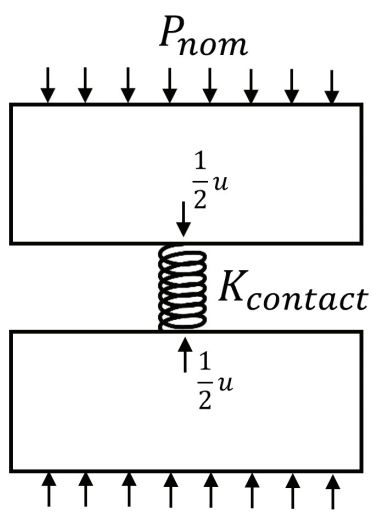

Fig. 1 Representation of the interface as a spring contact model

$$K_{\text{contact}} = -\frac{dP_{nom}}{du} \tag{1}$$

This stiffness represents a lumped parameter that accounts for the effects of the topology and surface roughness at the interface. When sound waves propagate through materials in complete contact, variations in their acoustic impedances result in a portion of the acoustic energy being reflected back to the source as shown by Eq. 2 [7], where R is the reflection coefficient, and Z is the acoustic impedance of the two materials in contact.

$$R = \frac{Z_1 - Z_2}{Z_2 + Z_1} \tag{2}$$

If the materials were of the same composition and in perfect contact there would be no reflection at the interface, as the acoustic impedance would not change, and all the energy would be transferred. Actual interfaces consist of asperities which

result in small air gaps between surfaces, causing sound waves to be reflected. By measuring the amplitude of the reflection voltage from the transducer, R can be calculated as

$$R = \frac{V_{\text{reflected}}}{V_{\text{incident}}}, \tag{3}$$

where $V_{\text{reflected}}$ and V_{incident} represent the reflected and incident ultrasonic wave respectively. Since the acoustic impedance of air is much less than that of metal, V_{incident} can be approximated using $V_{\text{reflected}}$ under no contact. Drinkwater also showed that if the wavelength of the ultrasound is significantly larger than the air gap, then the reflection coefficient can be related to the contact stiffness as shown in Eq. 4 [7], where Z is the acoustic impedance of the materials in contact, ω is the angular frequency of the transmitted wave, R is the reflection coefficient, and K is the contact stiffness at the interface.

$$K = \frac{\omega Z}{2}\sqrt{\frac{1}{R^2} - 1} \tag{4}$$

The contact stiffness across an interface at multiple points can be determined using a roving piezoelectric transducer using Eq. 4, as long as V_{incident} remains constant. Consistent coupling is required to ensure V_{incident} remains constant as the transducer moves along the interface for which we are proposing the method outlined below.

Experimental Setup

To ensure consistent coupling a conformable delay-line with magnetic attachment was chosen to couple the transducer to the test specimen. A conformable delay-line consists of a flexible polymer that adjusts to the surface and provides consistent coupling when the same force is applied, which is provided by the magnets. The conformable delay-line, depicted in Fig. 2b, was made of Aqualink^{TM} 100, a thermoset plastic from Innovation Polymers, and was attached to the bottom of the fixture using neodymium magnets embedded in a plastic holder, as shown in Fig. 2c. Additionally, the delay-line reflection can be used to determine if there is consistent coupling as this quantity represents the amount of energy reflected from the specimen and therefore relates to the amount of energy transmitted into the interface.

To validate this approach, we created a test setup to simulate the contact of a mechanical joint under quasistatic loading and is shown in Fig. 2. The test specimen (a) was comprised of a rod (D = 12.7 mm $\times$ H = 102 mm) and a corresponding cylindrical base (D = 44 mm $\times$ H =102 mm) machined to house the transducer at a depth of 12.7 mm. The test fixture was made from 410 Stainless Steel (SS) and selected for its magnetic properties and corrosion resistance. Both contact areas were flattened and polished to an average surface roughness (Ra) of less than 1 μm. The arrows in Fig. 2a show the incident and reflected waves from the transducer. An Olympus PR3072 pulser receiver was used to excite a 5 MHz, 6 mm diameter transducer in a pulse echo configuration. The size and frequency of the transducer were selected based on the acoustic properties of the material, horizontal resolution (cone width), and to account for the nearfield effect of the transducer based on its distance from the interface. A linear actuator was used to load and unload the test specimen from 0 to 4.5 kN. Data was captured using an oscilloscope and post processing was performed in MATLAB.

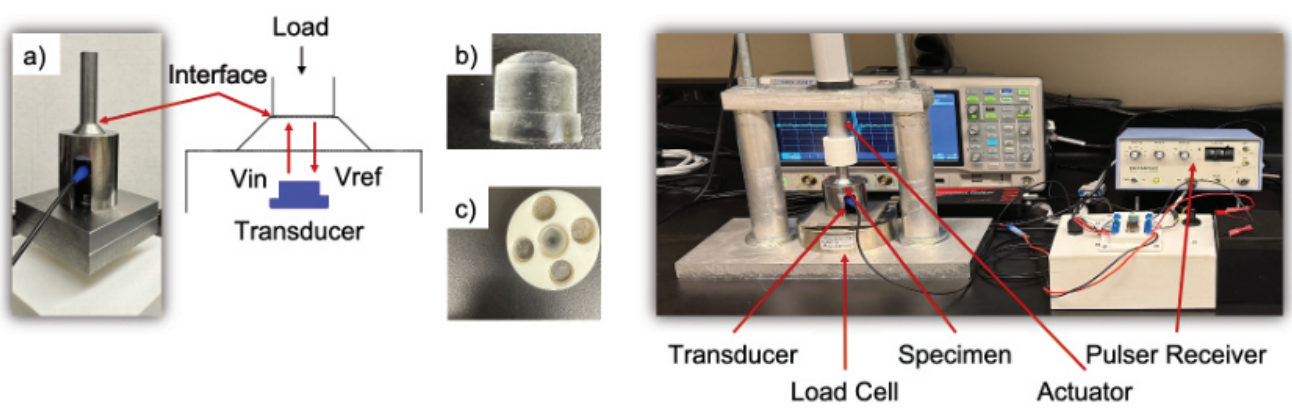

Fig. 2 Experimental Setup - (a) Test specimen (b) Conformable delay-Line (c) Magnetic holder

Preliminary Results

Prior to the quasistatic loading experiment, a metal-to-air interface consisting of a 410 stainless steel plate (145 mm × 76 mm × 12.7 mm) was used to assess consistent coupling of the magnetically attached conformable delay-line. The delay-line and transducer were held in place only by the magnetic force of the attachment device, which applies the same force regardless of where it is attached. The test involved placing the transducer at multiple locations on the test plate and measuring the delay-line and metal-to-air reflection voltages. Figure 3 shows the test plate with the magnetically attached conformable delay-line (a) and five sample delay-line reflections (b) and five metal to air reflections (c). It can be observed that delay-line and metal-to-air reflection measurements remained consistent across all test points, with reflection voltages being within ±0.1V of their average of 3.1V and 1.5V respectively. Additionally, a qualitative test was performed to investigate the effect of surface roughness on coupling performance with portions of the plate roughened to an Ra > 5 μm. The change in surface roughness had a negligible effect on the coupling performance; voltages between the roughened portion and smooth finish remained within the same ± 0.1V band. These tests demonstrate that the proposed solution of a conformable delay-line with a magnetic holder ensures consistent coupling between the metal and the transducer, regardless of the roughness of the surface the transducer is being coupled to.

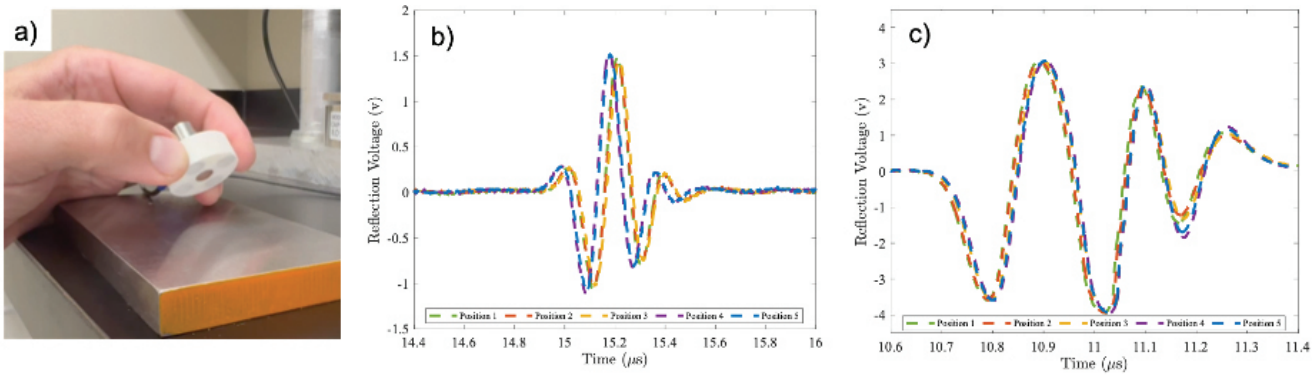

Fig. 3 Consistent Coupling – (a) Test plate (b) Reflection voltage across the plate

The quasi-static loading experiment described previously was then performed to assess the effectiveness and repeatability of contact stiffness measurements using this method. The test specimen was loaded from 0 to 4.5 kN in 200 N increments. This test was repeated several hundred times with fairly consistent results. Figure 4a shows contact stiffness measurements completed during initial testing and Fig. 4b depicts the most recent set of eighty runs. The test was repeated approximately 800 times between the measurements shown in Figs. 4a and 4b. It can be observed that the stiffness reaches an average value

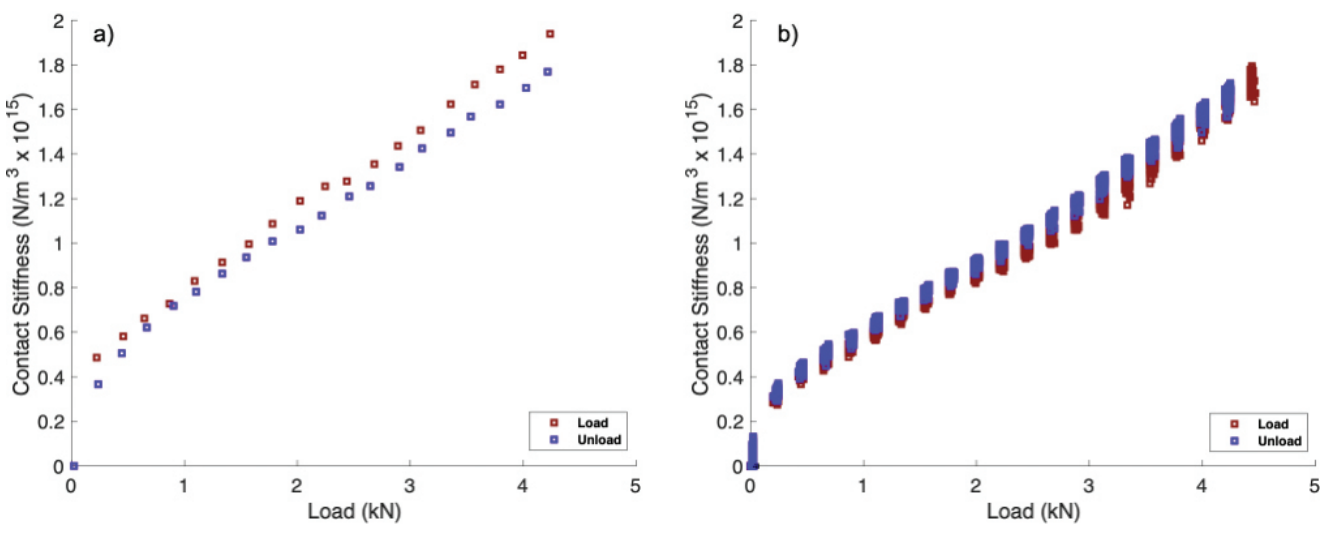

Fig. 4 Contact stiffness vs load (kN) (a) first run at the start of testing, (b) most recent set of runs

of 1.74 x 10^{15} N/m^3 for a load of 4.5 kN, with a standard deviation of 3.1 x 10^{13} N/m$^{3\cdot}$ Additionally, the slope of contact stiffness vs load from 0.5 kN to 4.5 kN is similar for all runs, with an average value of 3.2 x 10^{14} N/m^3 - kN with a standard deviation of 5.0 x 10^{13} N/m^{3}kN. This demonstrates that the proposed method that was conducted over 1,020 loading and unloading cycles is a repeatable and viable option for measuring contact stiffness across metal-to-metal interfaces.

Conclusions

This work proposes a technique for measuring contact stiffness across metal-metal interfaces utilizing an ultrasonic transducer with a dry-coupled, conformable delay-line held in place by magnetic attachment. Preliminary results indicate that this approach provides a cost effective, roving transducer solution that addresses several limitations of existing ultrasonic coupling techniques for measuring contact stiffness across larger interfaces. The study further demonstrated the repeatability of this method for measuring contact stiffness by performing measurements across 1,020 loading and unloading cycles with relatively consistent results. Future research will apply this method to study the relationship between surface roughness and contact stiffness under quasistatic loading conditions. Subsequent work will involve measurements of contact stiffness across small areas under dynamic loading with the goal of expanding these measurements to large interfaces.

References

1. E. J. Richards and D. J. Mead. *Noise and Acoustic Fatigue in Aeronautics*. Chichester, United Kingdom: John Wiley & Sons Ltd, London New York Sydney Toronto, 1st edition, 1968.
2. Li, Dongwu, Daniele Botto, Chao Xu, and Muzio Gola. “Fretting Wear of Bolted Joint Interfaces.” *Wear* 458–459, October 2020.
3. M. Brons, T. A. Kasper, G. Chauda, S. W. B. Klaassen, C. W. Schwingshackl, and M. R. W. Brake, “Experimental Investigation of Local Dynamics in a Bolted Lap Joint Using Digital Image Correlation,” *Journal of Vibration and Acoustics*, Jul. 2020.
4. T. Dreher, M. R. W. Brake, B. Seeger, and M. Krack. In situ, real-time measurements of contact pressure internal to jointed interfaces during dynamic excitation of an assembled structure. *Mechanical Systems and Signal Processing*, 160:107859, November 2021.
5. Tong Wei, Alfredo Fantetti, Frederic Cegla, and Christoph Schwingshackl. An optical method to monitor transparent contact interfaces during high frequency shear vibration cycles. *Wear*, 524-525:204840, July 2023.
6. K. Kendall and D. Tabor, An utrasonic study of the area of contact between stationary and sliding surfaces. *Proceedings of the Royal Society of London. A. Mathematical and Physical Sciences*, 323(1554):321–340, June 1971.
7. B. W. Drinkwater, R. S. Dwyer-Joyce, and P Cawley. A study of the interaction between ultrasound and a partially contacting solid—solid interface. *Proceedings of the Royal Society of London. Series A: Mathematical, Physical and Engineering Sciences*, 452(1955):2613–2628, December 1996
8. L. Pesaresi, A. Fantetti, F. Cegla, L. Salles, and C. W. Schwingshackl, “On the Use of Ultrasound Waves to Monitor the Local Dynamics of Friction Joints,” *Exp Mech*, vol. 60, no. 1, pp. 129–141, Jan. 2020.
9. Trevor W. Jerome, Micah R. Shepherd, and Stephen A. Hambric. Ultrasonic investigation of the pressure profile on the faying surface of fastened aluminum plates. *Mechanical Systems and Signal Processing*, 150:107260, March 2021.
10. D. Shetty, J. Wagner, R. Djishev, M. Brake, “In-Situ Measurement of Local Contact Stiffness using Ultrasound”, in SEM’s 42nd IMAC, February 2024.